DESOLDERING TOOL

# HAKKO ACE NO. 481

## INSTRUCTION MANUAL

Please read this instruction manual thoroughly before operating the HAKKO ACE No. 481 unit.

Developed from years of soldering experiences, the HAKKO ACE No.481 is a newly-designed desoldering tool featuring the latest advance in soldering technology.

This instruction manual describes the correct methods of operation, inspection and repair.

## TABLE OF CONTENTS



## 1. Specifications

| | |
|---|---|
| Power supply | 110V-120V, 220V-230V, 240V. |
| Power consumption | 85W |

a) Vacuum Pump

| | |
|---|---|
| Pump type | Diaphragm |
| Pressure | 600mm Hg (max.) |
| Motor Output Power | 25W (4-pole) |
| Fuse | 2A |
| Outer Dimensions | 150(W) × 110(H) × 180(D) mm |
| Weight | 3.0 kg (approx.) |

b) Desoldering Iron

| | |
|---|---|
| Heating Element | Ceramic, 30W |
| Filter Pipe | Heat-resistant pyrex glass |
| Filter | 2-stage, replaceable |
| Cord/Hose | 1.5m each |
| Pump Connection | Large metal connector plug (with grounding pin) |
| Nozzle inner diameter | 1.0mm (standard), 0.8, 1.3 and 1.6mm (optional) |
| Weight | 230 g (approx.) w/o Cord and Hose |

c) Accessories

Special Iron Stand 1 pc.
Nozzle Cleaning pin 1 pc.
Heating Core Cleaning pin 1 pc.
Filter Set (1 steel wool & 1 white felt filter) 5 sets
Anti-seizure lubricant 1 pc.
Check Valve 1 pc.
Cleaning Shaft for both Nozzle and Heating Core 1 pc.

## 2. Part Name

a) Vacuum Pump

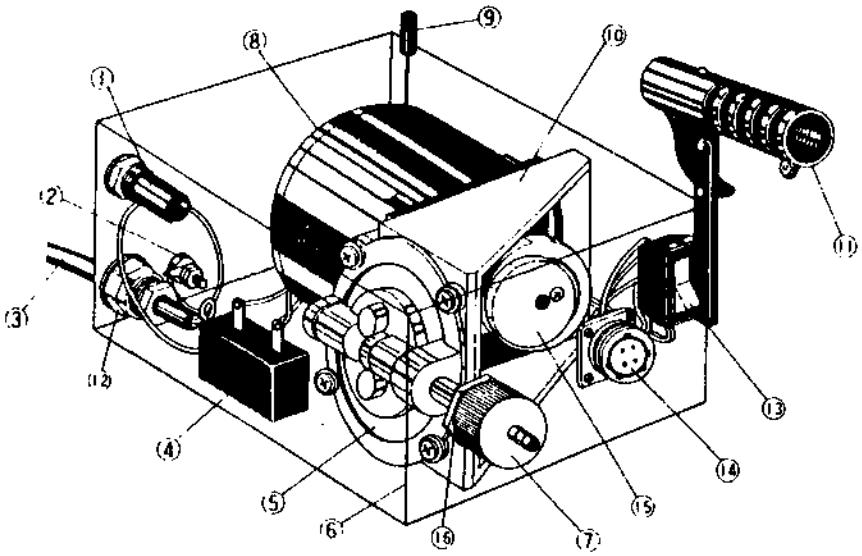

(Fig.1)

1. Fuse Holder
2. Ground Terminal
3. Power Supply Cord
4. Condenser
5. Pump Head
6. Case
7. Vacuum Outlet Cap
8. Electric Motor
9. Nozzle Cleaning Pin
10. Pump Body
11. Iron Stand
12. Cord Stopper
13. Power Switch & Lamp
14. Iron Connector Socket
15. Balance Weight
16. Vacuum Outlet Retainer



b) Desoldering Iron

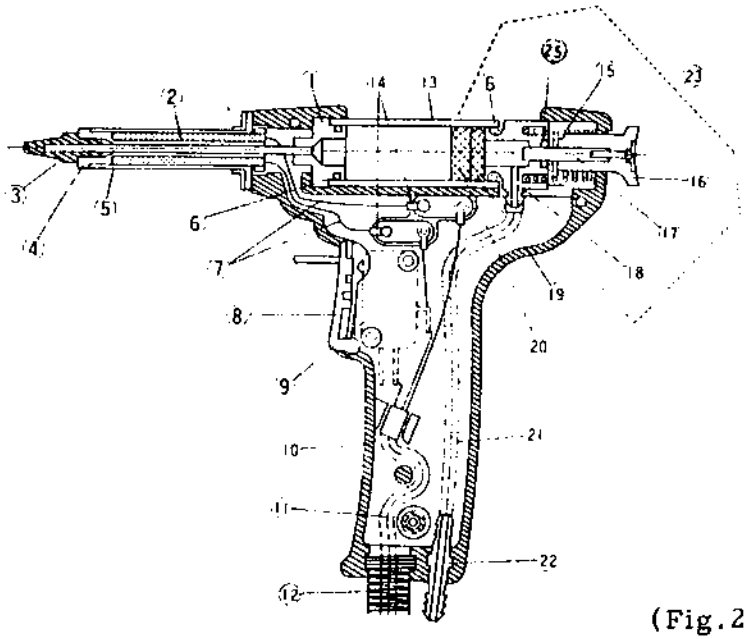

(Fig.2)

1. Front Holder
2. Heating Element
3. Nozzle
4. Heating Core
5. Element Cover
6. O-Ring
7. Element Lead Line
8. Trigger
9. Microswitch
10. Housing
11. 4-core Supply Cord
12. Cord Protective Covering
13. Filter Pipe
14. Crimped Connector
15. Holder Spring
16. Knob
17. Holder Fitting
18. Back Holder
19. Felt Filter (white)
20. Steel Wool Filter
21. Guide Hose
22. Hose Joint
23. Back Holder Assembly
24. Iron Connector Plug (Not Shown)
25. O-ring

## 3. Setting the HAKKO ACE No.481.

1) Remove the 2 screws on the right side of the vacuum pump unit and install the desoldering iron stand on the unit as shown in Fig.3.

2) The hole in new, unused nozzle is plugged with tinning material. To remove the tinning material, simply install the nozzle on the desoldering iron and heat up the iron. When the tinning material is completely melted, press the trigger, and the tinning will be drawn out of the nozzle and into the filter tube.

3) Remove the packing cover from the vacuum outlet retainer (not shown). Insert a white felt filter (Item 3, Fig.4) into the vacuum outlet cap (Item 4, Fig.4), then screw the cap on to the vacuum outlet retainer (Item 2, Fig.4).

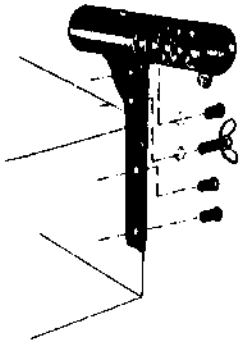

(Fig.3)



## 4. How to Use The HAKKO ACE No.481

1. Connect the Iron Connector Line and Suction Hose Line to both the Pump and the desoldering iron.

2. Plug the Power Supply Cord into an AC outlet and connect the Ground Line.

3. Turn the Power Switch on. Check to see that the Power Lamp is lit, then wait 10 minutes for the iron to heat up.

   CAUTION: Do not use the unit before the iron has been sufficiently heated up, or the nozzle may become clogged with solder and flux.

4. When the iron is sufficiently hot, insert the supplied Nozzle Cleaning Pin into the nozzle and remove any material that may be in the pipe or nozzle.

5. Place the nozzle on the lead wire of component to be desoldered and heat the solder around the wire for 2 to 3 seconds. Move the iron while heating the solder. The solder is melted when the wire can be moved.
   At this point, pull the trigger on the iron, and the vacuum pump will operate and absorb the solder.

Note: When the solder is not melted completely, there may be insufficient suction to remove the components.
Should this occur, resolder the component, then perform step 5 again.
Please use Nozzle Cleaning Pin (small) for Nozzle, and Heating Core Cleaning Pin (large) for Heating Core removing the nozzle



## 5. Maintenance

a) Replacement of the Filters in the Iron.
When the suction power is reduced due to the accumulation of solder in the Filter Pipe, replace the filters as follows.

1. Pull out the knob marked "PULL", and turn it 90° to either the left or right in order to secure it.
2. Slide the filter pipe towards the back of the iron about 5mm, then lift the pipe out.
3. Remove the accumulated solder from the Filter Pipe. If the Steel Filter is stiff with adhered solder, replace it with a new filter. If the white Felt Filter is stiff with flux, also replace it with a new filter. Be sure to place the Felt Filter on the pump side of the iron and the Steel Filter on the nozzle side.

CAUTION: Do not operate the pump without both filters in place. You may damage the pump.

b) Replacement of the Filter on the Pump Case.

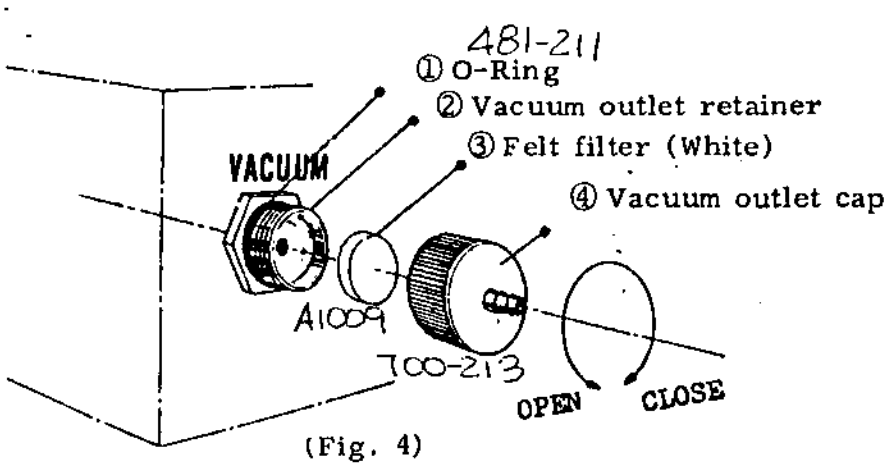


(Fig. 4)

1. Turn the Vacuum Outlet Cap counterclockwise and remove it.
2. Remove the white Felt Filter and replace it with a new one. The same Felt Filters used in the iron may be used.
3. Replace and tighten the Vacuum Outlet Cap.

NOTE: To remove the Pump Head, first remove the Vacuum Outlet from the Case.

c) Replacing The Nozzle

1. Unscrew the old nozzle (item 6, Fig.5) from the desoldering iron by turning the nozzle counterclockwise with a pair of pliers.
2. Coat the threads of the new nozzle with anti-seizure lubricant (supplied) and install it on the desoldering iron.

NOTES:

a) Always replace the nozzle while the desoldering iron is hot in order to melt any solder that may be binding the nozzle to the heating core. (item 4, Fig.5)

b) Be careful not to overtighten the nozzle. Overtightening may damage the threads.

c) Slightly loosen the nozzle at the end of each working day in order to prevent the nozzle from "freezing" to the desoldering iron.



d) Replacement of the Heating Element

1. Remove the Filter Pipe. (Refer to item 2, Fig.5)
2. Unscrew the 4 Flange set screws from the Element Cover Flange and unscrew the 3 Housing set screws.
3. Place the down with the nozzle pointing to the left, as shown in Fig.5. Slowly lift the top half of the housing, holding the Front Holder down in the bottom half of the housing, and remove the top half of the housing.
4. Unscrew the 2 Element Connection Screws.
5. Lift the Front Holder out of the bottom half of the housing and separate it from the Heating Core.
6. Remove the Heating Element from the Element Cover.
7. Install the new Heating Element by following the removal steps in the reverse order.

Construction of the Iron

(Fig.5)

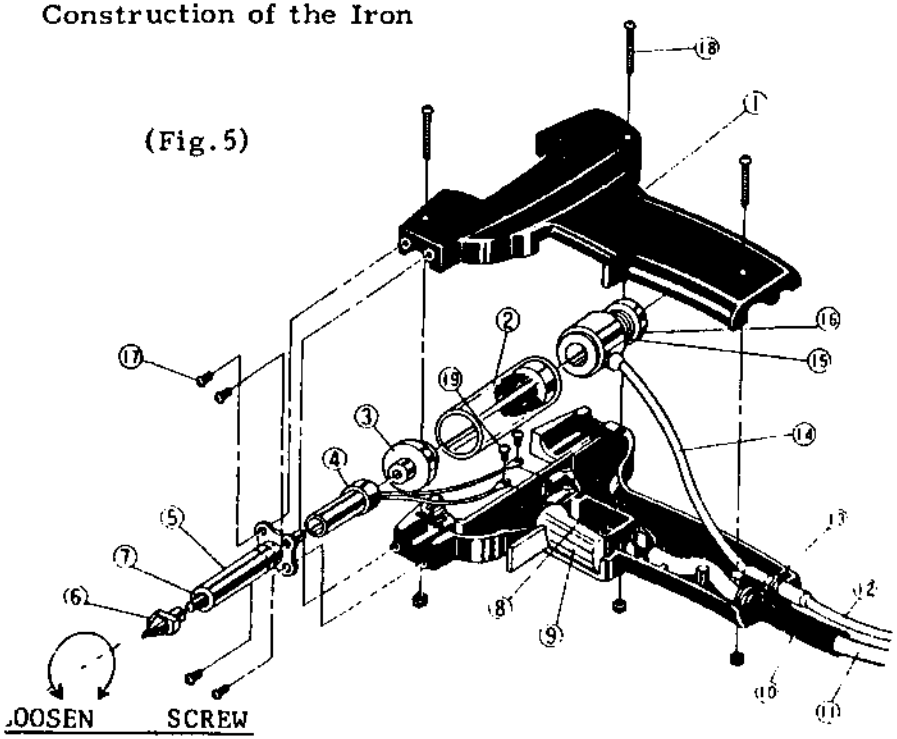


1. Housing
2. Filter Pipe
3. Front Holder
4. Heating Element
5. Element Cover
6. Nozzle
7. Heating Core
8. Microswitch
9. Trigger
10. Cord Protective Covering
11. 4-Core Supply Cord
12. Hose
13. Hose Joint
14. Guide Hose
15. Back Holder
16. Knob
17. Flange Set Screw
18. Housing Set Screw
19. Element Connection Screw



e) Replacement of the Heating Core.

1. Unscrew the 4 Flange Set Screws.
2. Remove the Element Cover Assembly by slowly pulling it towards the nozzle.
3. Note the thin Heating Core pipe in the New Element Cover Assembly. Insert this thin pipe into the hole in the Front Holder.
4. Secure the Ground wire and the Element cover Flange to the iron with the 4 Flange Set Screws.

f) Cleaning and Replacement of the Vacuum Pump Diaphragm and Valve.

Although the HAKKO ACE No.481 features a 3-ply filter, after several days of prolonged use, the vacuum suction power may drop due to flux clinging to the Diaphragm and the Valve Plate. Should this occur, clean and/or replace the Diaphragm and Valve as follows.

1. Unscrew the Case Set Screws.
2. Unscrew the 4 set screws on the Pump Head.
3. Unscrew the screw securing the Diaphragm Setting Plate and remove the Diaphragm.
4. Unscrew the 2 screws securing the Fixing Plate and the Valve Plate.
5. Clean the flux from the Valve Plate and the Diaphragm with alcohol, etc., and check all pump parts for damage. If a part is cracked, deformed, etc., replace it with a new part.

6. Reassemble the Pump by following the disassembly steps in the reverse order. Take special care install the Valve Plate in the proper direction, and be sure to install the Pump Head so that it is positioned under that part of the Diaphragm where the Crank reaches its lowest point.

NOTE:

1. Smear a silicon oil on the surface of the Valve Plate and on the Diaphragm in order to permit faster and smoother disassembly next time.
2. Do not allow any foreign matter to enter the Pump during reassembly.

Construction of Diaphragm

(Fig. 6)

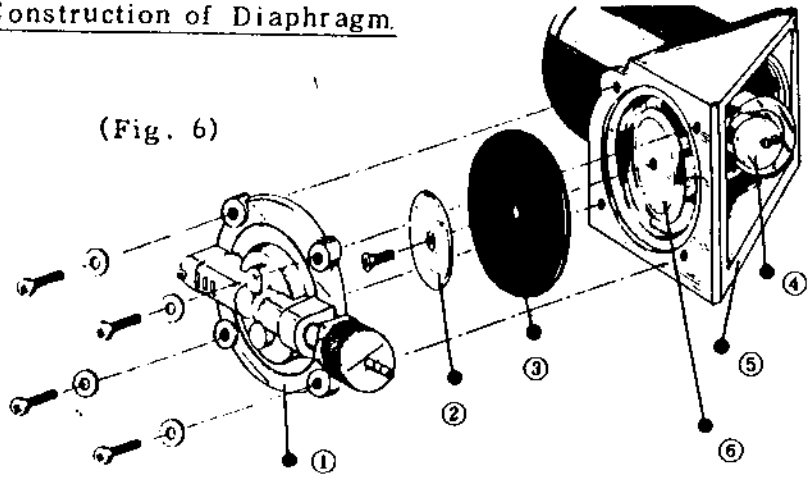


1. Pump Head
2. Diaphragm Setting Plate
3. Diaphragm
4. Balance Weight
5. Pump Body
6. Crank (481-206)



Construction of the Pump Head

(Fig. 7)

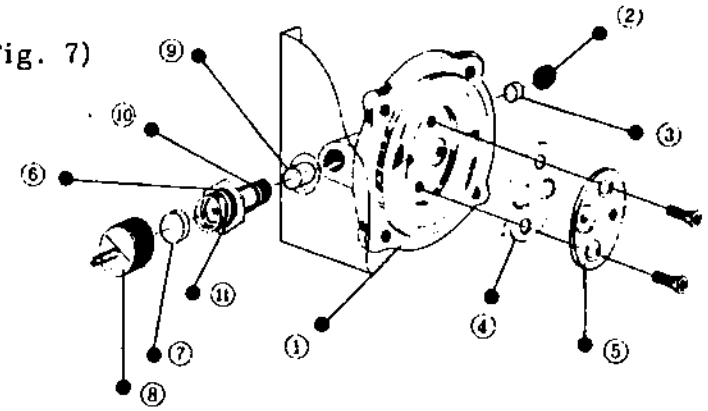


1. Pump Head
2. Filter Holding Plug
3. Exhaust Filter
4. Valve Plate
5. Fixing Plate
6. Vacuum Outlet Retainer
7. Felt Filter
8. Vacuum Outlet Cap
9. Check Valve
10. O-Ring P-9
11. O-Ring P-18

* Should melted solder in the Nozzle suddenly supurt out while the Vacuum Pump is operating, we recomended replacing the Sponge Filter in the Pump Head with a supplementary Check Valve.

## 6. Troubleshooting Guide

| TROUBLE | POINT TO CHECK |
|---|---|
| a) Power Supply Lamp doesn't light up. | * Is the Fuse blown? |
| b) Vacuum Pump does not move. | * Is the Connector properly connected? |
| c) Solder can't be absorbed. | * Does the Vacuum Pump Move?<br>* Is the Hose properly connected?<br>* Is the Filter Pipe full of solder?<br>* Are the Filter stiff with solder or flux?<br>* Is the Nozzle Hole or the Heating Core Hole clogged?<br>(Insert a nozzle cleaning pin into the nozzle or a heating core cleaning pin into the hole of heating core.) |
| d) Solder doesn't sufficiently melt. | * Is the Heating Element broken?<br>* Is the Connector properly connected?<br>* Is the Nozzle Screw loosen?<br>* Is the Power Supply Cord broken?<br>* Is the Nozzle oxidized or dirty with flux? |

* If the problem remains unsolved after checking the above, contact your nearest HAKKO representative.



## 7. Wiring Diagram

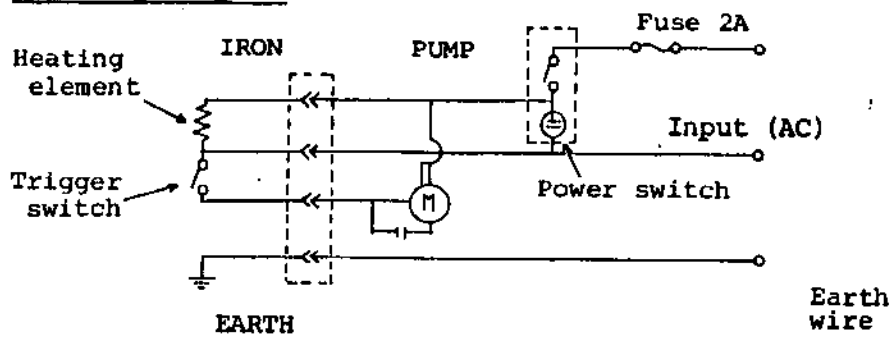


## 8. Replacement Parts

| New Part No. | Part No. | Part Name | Specification |
|---|---|---|---|
| 481-T-0.8<br>481-T-1.0<br>481-T-1.3<br>481-T-1.6 | 2481-1 | Nozzle 0.8ø 1.0ø 1.3ø 1.6ø | 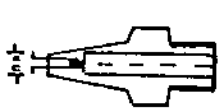 |
| 481-021<br>481-002 | 4481-11 | Filter Set | 1 Steel ool & 1 Felt |
| | 4481-12 | Filter Pipe | with Filter Set |
| 706-H-V12 | 3481-1 | Heating Element | 30 W |
| 481-012 | 3481-11 | Heating Core | With Element Cover |
| 481-101 | 481-01 | Front Holder | With O-Ring |
| 481-102 | 481-02 | Back Holder | Assembly |
| A1012 | 481-03 | O-Ring | P-12 |
| 481-201 | 481-04 | Diaphragm Set | Valve Plate, Diaphragm and Filter |
| B1085&B1086 | 481-05 | Nozzle Cleaning Pin<br>Heating core cleaning pin<br>Cleaning Shaft for both Nozzle and Heating Core | |
| | 481-06 | Housing | |
| | 481-07 | Power Supply Cord | 4-Core Vinyl Cord |

| | 0.8ø | 1.0ø | 1.3ø | 1.6ø |
|---|---|---|---|---|
| A | 0.8 | 1.0 | 1.3 | 1.6 |
| B | 2.5 | 2.5 | 2.5 | 3.0 |